Verbois

# INSTRUCTIONS DE MONTAGE / ASSEMBLY INSTRUCTIONS
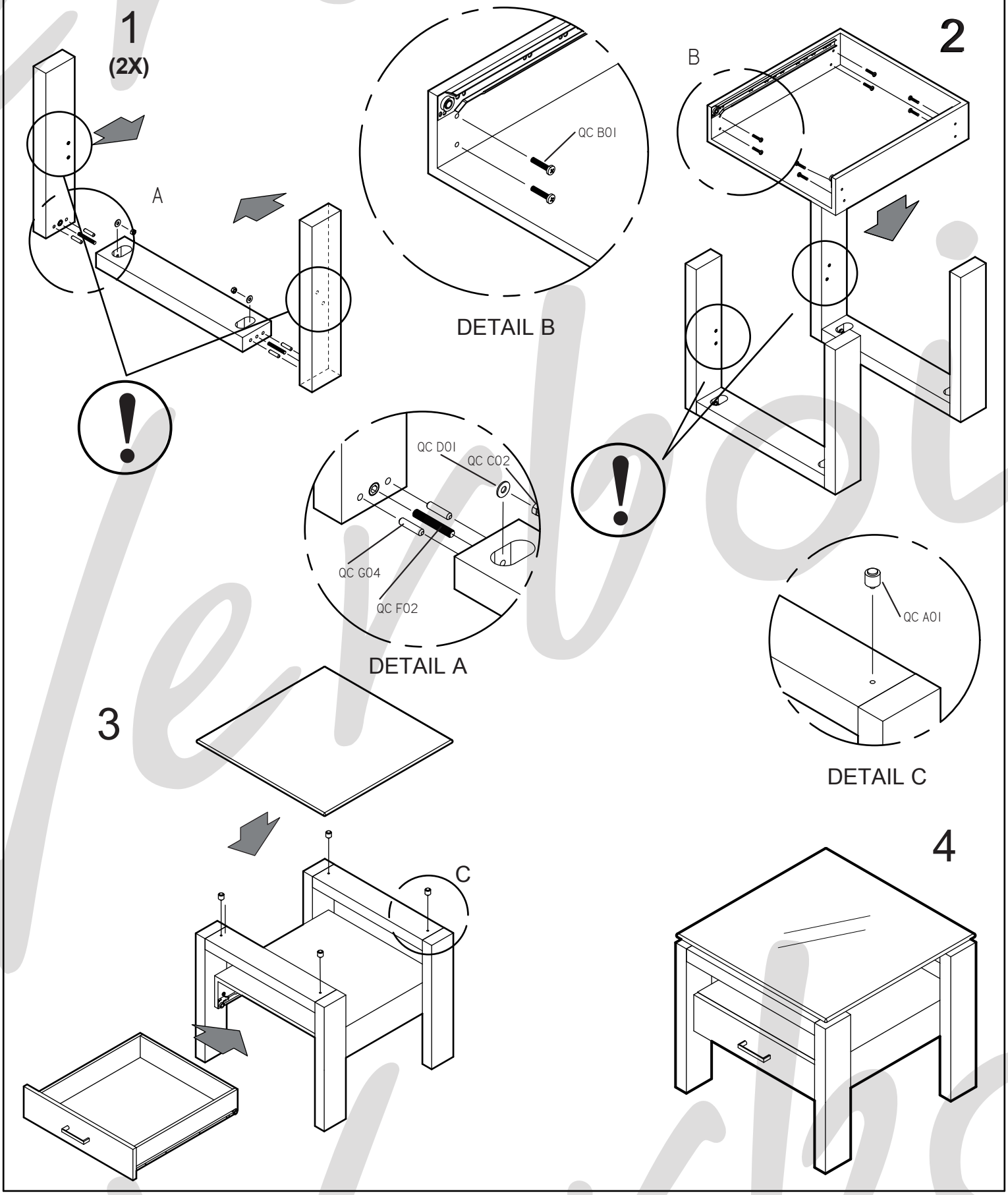
| DATE | 13 / 10 / 2011 | SC |
|---|---|---|